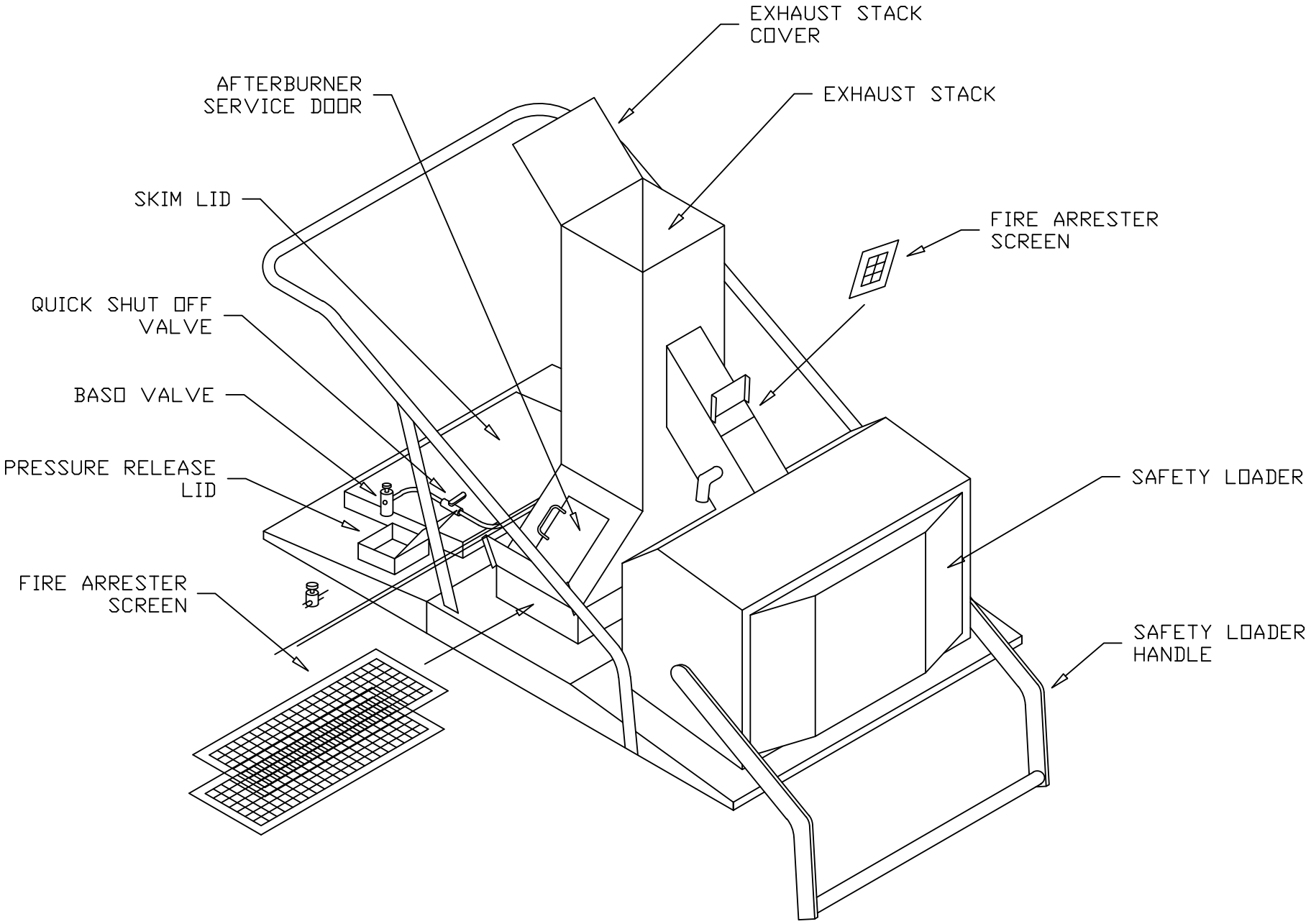
EXHAUST STACK COVER
AFTERBURNER SERVICE DOOR
EXHAUST STACK
SKIM LID
FIRE ARRESTER SCREEN
QUICK SHUT OFF VALVE
BASO VALVE
PRESSURE RELEASE LID
SAFETY LOADER
FIRE ARRESTER SCREEN
SAFETY LOADER HANDLE