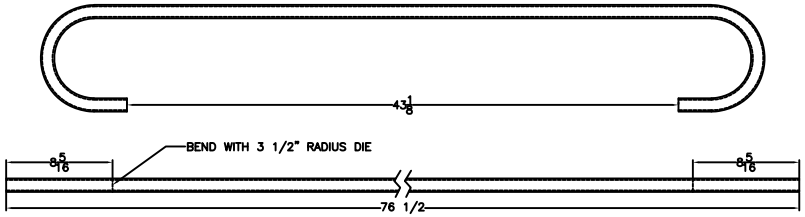

ITEM # 7

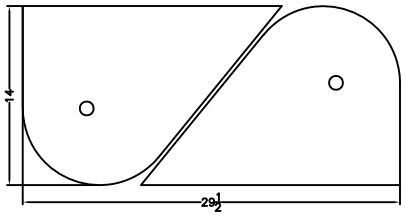

(MINI MOPPER 408-0030.NC)

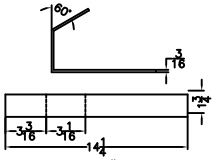

ITEM # 4

ITEM # 6

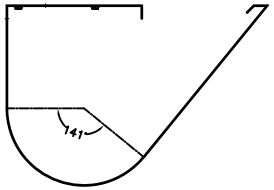

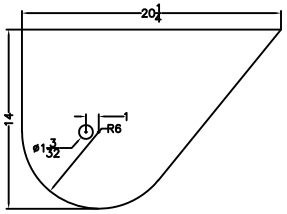

ITEM # 1

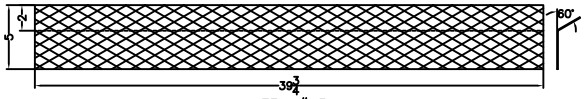

ITEM # 3

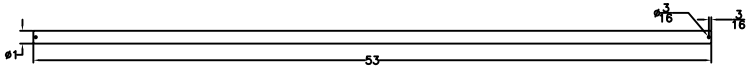

ITEM # 5

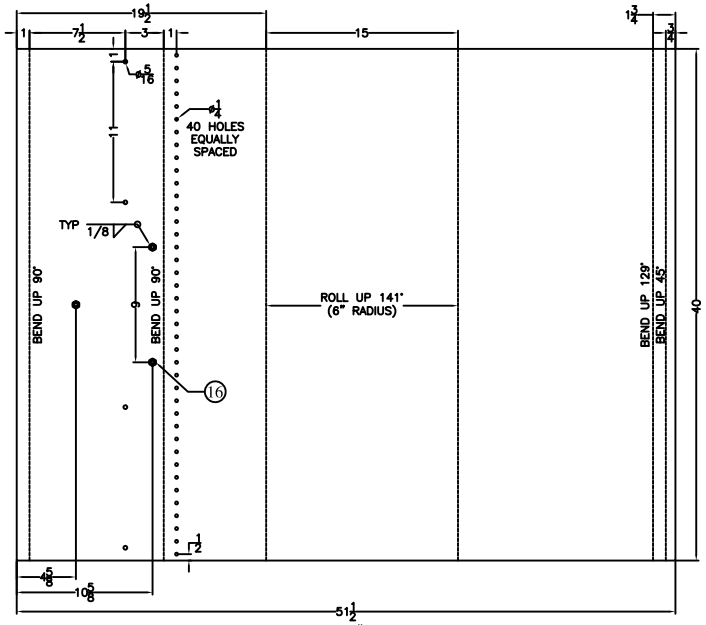

ITEM # 2

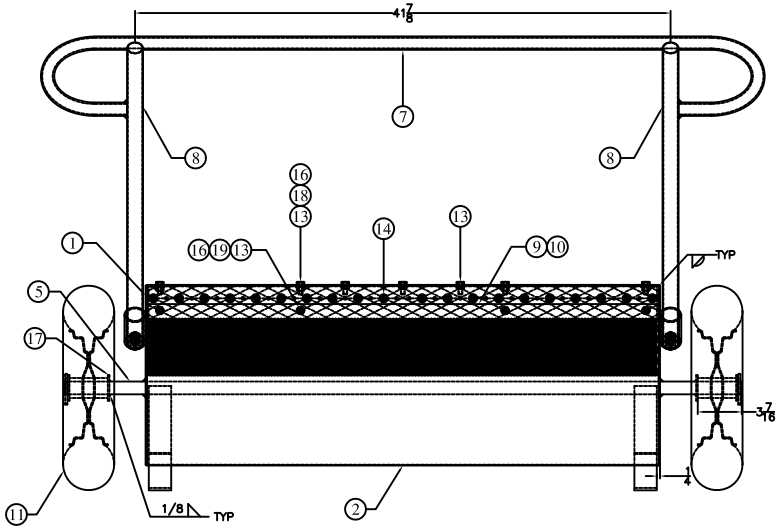

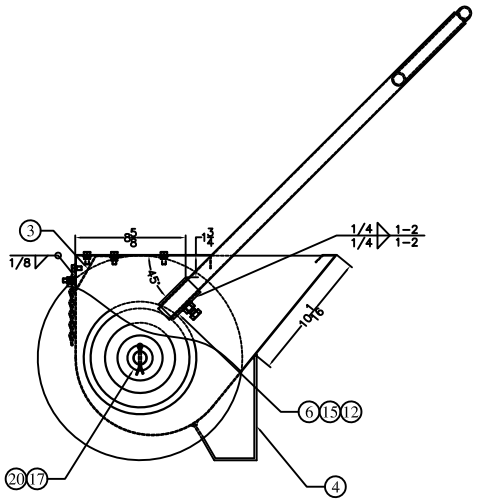

NOTE: ALL FILLET WELDS TO BE 1/4 UNLESS OTHERWISE STATED

ITEM #	DESCRIPTION	MATERIAL	QTY	DRAWING #
20	COTTER PIN 3/16 X 2	PARTS	2	N/A
19	LOCK WASHER 5/16	PARTS	4	N/A
18	FLAT WASHER 1/4	PARTS	4	N/A
17	FLAT WASHER 1" SAE	PARTS	4	N/A
16	HEX NUT 5/16 UNC	PARTS	11	N/A
15	HEX NUT 1/2 UNC	PARTS	2	N/A
14	SELF TAPPING SCREW 5/16 UNC X 1/2 LG	PARTS	20	N/A
13	HEX BOLT 5/16 UNC X 3/4 LG	PARTS	11	N/A
12	HEX BOLT 1/2 UNC X 1 LG	PARTS	2	N/A
11	WHEEL 400 X 480 X 1	PARTS	2	N/A

ITEM #	DESCRIPTION	MATERIAL	QTY	DRAWING #
10	JACK CHAIN #12 X 5 LINKS	PARTS	160	N/A
9	MINI MOPPER CHAIN STRIP	PARTS	1	N/A
8	TUBING 1 1/4 OD X 16 GA X 32 3/4 LG	ERW	2	N/A
7	PIPE 3/4 X 76 1/2 LG	STD	1	N/A
6	PIPE 1 1/4 X 3 LG	STD	2	N/A
5	R/B 1 X 53 LG	CRS	1	N/A
4	8 GA X 1 3/4 X 14 1/4 LG	HRS	2	N/A
3	16 GA X 5 X 39 3/4 EXPANDED METAL	HRS	1	N/A
2	16 GA X 40 X 51 1/2	HRS	1	N/A
1	12 GA X 14 X 29 1/2	HRS	1Set	N/A

NO.	REVISION	BY	DATE
1	ITEM # 7 STYLE CHANGED, ITEM # 4 MATERIAL SPEC. CHANGED	RDS	AUG 21, 2014

SPAR-MARATHON ROOFING SUPPLIES

THIS DRAWING IS THE PROPERTY OF SPAR MARATHON ROOFING SUPPLIES. THIS MUST NOT BE COPIED OR REPRODUCED IN ANY MANNER OR PARTS MANUFACTURED OR DESIGN DISCLOSED WITH OUT THE WRITTEN PERMISSION OF OWNER.

DRAWING NAME	MINI MOPPER		
UNIT WEIGHT	LBS.	QTY.	1
ITEM NO.	1		
USED ON		DRAWING SCALE	1:7
MATERIAL SPECS.	SEE PARTS LIST	DRAWING NUMBER	55
REV.	1		
DRAWN	RDS	DATE	SEPT 30, 2011
APPROVED		DATE	