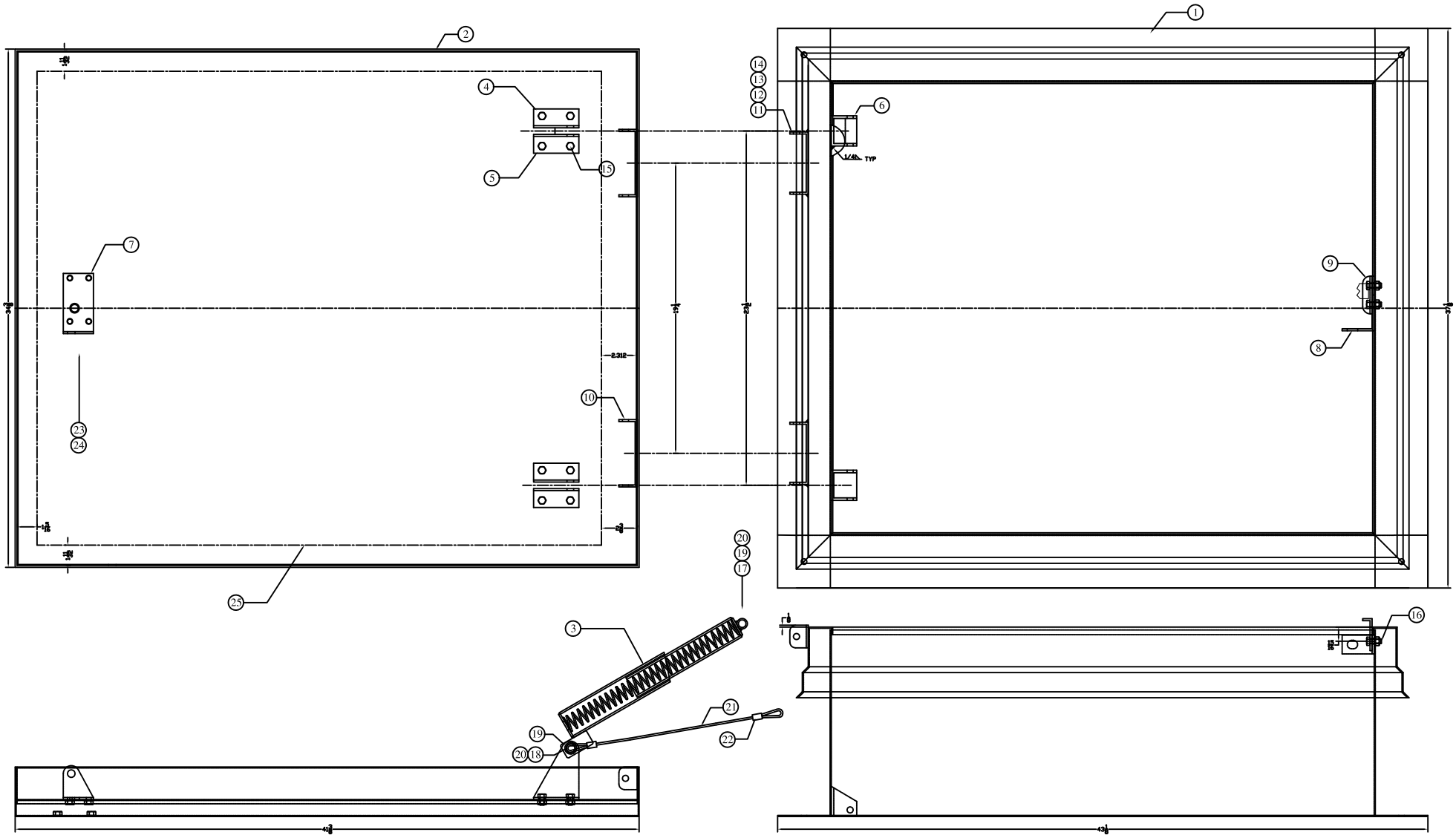

ITEM #	DESCRIPTION	MATERIAL	QTY	DRAWING #
27	FIBRE BOARD 1/2 X 12 X 32	STD	4	N/A
26	FIBRE BOARD 1/2 X 12 X 36	STD	4	N/A
25	WEATHER STRIP 136 LG	PARTS	1	N/A
24	PAD LOCK HANDLE	PARTS	1	N/A
23	PAD LOCK	PARTS	1	N/A
22	COPPER OVAL SLEEVE 5/32	PARTS	4	N/A
21	WIRE ROPE 5/32 X 18 LG	PARTS	2	N/A
20	NYLOCK NUT 3/8 UNC	PARTS	4	N/A
19	PLAIN WASHER 3/8	PARTS	4	N/A

ITEM #	DESCRIPTION	MATERIAL	QTY	DRAWING #
18	HEX BOLT 3/8 UNC X 1 3/4 LG	PARTS	2	N/A
17	HEX BOLT 3/8 UNC X 3 LG	PARTS	2	N/A
16	HEX BOLT 5/16 UNC X 3/4 LG	PARTS	2	N/A
15	HEX BOLT 5/16 UNC X 1/2 LG	PARTS	14	N/A
14	COTTER PIN 1/8	PARTS	2	129
13	PLAIN WASHER 5/16	PARTS	4	129
12	R/B 3/8 X 5 LG	CRS	2	129
11	HINGE INNER BRACKET	HRS	2	129
10	HINGE OUTER BRACKET	HRS	2	129

ITEM #	DESCRIPTION	MATERIAL	QTY	DRAWING #
9	LATCH ENGAGING BRACKET	HRS	1	128
8	LOCKING BRACKET	HRS	1	127
7	LATCH MOUNTING BRACKET	HRS	1	126
6	OPENER MOUNTING BRACKET (FRAME SIDE)	HRS	2	125
5	OPENER MOUNTING BRACKET(COVER SIDE–R)	HRS	2	124
4	OPENER MOUNTING BRACKET(COVER SIDE–L)	HRS	2	124
3	COVER OPENER	SEE DRG	2	123
2	COVER ASSLY	SEE DRG	1	122
1	FRAME ASSLY	SEE DRG	1	121

SPAR-MARATHON ROOFING SUPPLIES

THIS DRAWING IS THE PROPERTY OF SPAR MARATHON ROOFING SUPPLIES. THIS MUST NOT BE COPIED OR REPRODUCED IN ANY MANNER OR PARTS MANUFACTURED OR DESIGN USED FOR OTHER THE WRITTEN PERMISSION OF OWNER.

DRAWING NAME: ROOF HATCH

DRG. SIZE | UNIT WEIGHT | USED ON | LBS. | QTY. 1 | ITEM NO. | DRAWING SCALE 1:3

MATERIAL SPECS. SEE PARTS LIST

DRAWN RDS DATE FEB 11, 2005

APPROVED DATE

DRAWING NUMBER 12 REV. 0